Teensy® 3.5 Back Side

Additional pins and features available on the back side

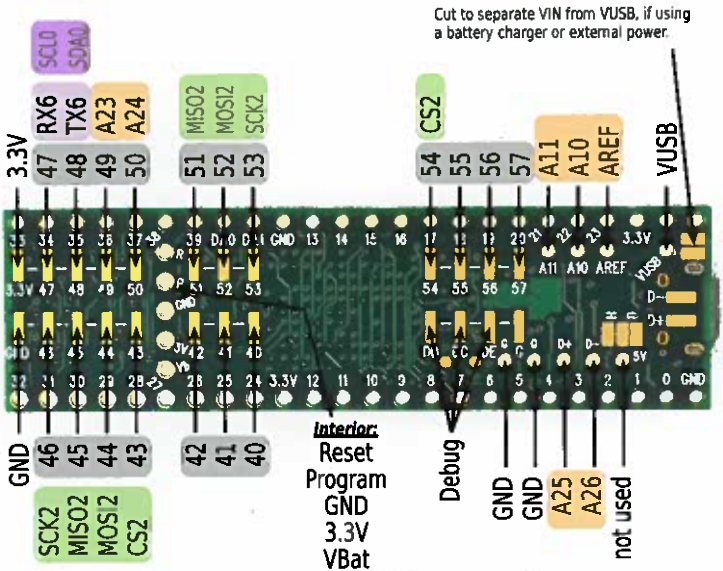

Teensy 3.5 pins with digital I/O are 5 volt tolerant. Other pins are **not** 5V tolerant. Do not apply more than 3.3V to A10, A11, A21, A22, A25, A26, AREF, Program or Reset.

Teensy 3.5 System Requirements:
PC computer with Windows 7, 8, 10 or later
or Ubuntu Linux 12.04 or later
or Macintosh OS-X 10.7 or later